Northeastern University
Civil and Environmental Engineering

Traffic Signal Timing and Intersection Improvement Massachusetts Avenue and Memorial Drive, Cambridge, MA

Also, Mass Ave & Amherst and Mass & 77 Mass Ave Crosswalk A.M. Peak period analysis

FINAL PROJECT

CIVE 7382 Advanced Traffic Control

Evan Wotton

Context

The intersection of Massachusetts Avenue (Mass Ave) and Memorial Drive in Cambridge MA, and extending north on Mass Ave to the pedestrian crossing at MIT's main entrance (77 Mass Ave.), is a heavily trafficked area that includes a bridge, underpass, waterfront park, and university buildings.

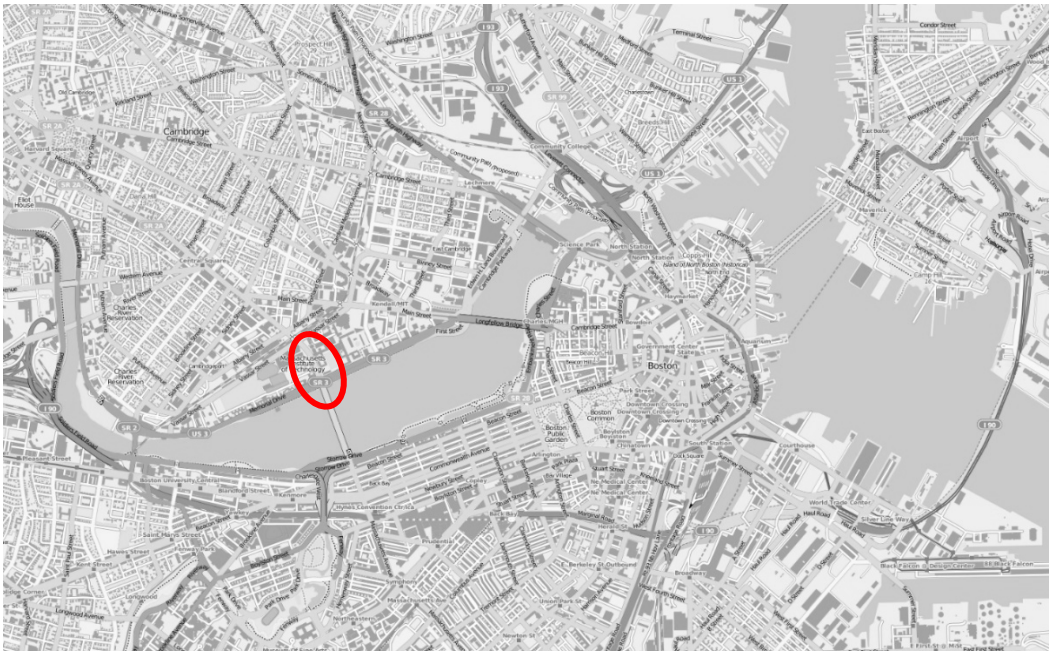

Figure 1: Map of Boston area with the intersection circled in red

Figure 2: Mass Ave runs North-South and Memorial Drive runs East-West. Note the underpass for Memorial Drive through traffic.

Mass Ave has a bike lane that gets frequent traffic. One of the main issues with the current intersection design is that of bike safety. Vehicles coming off the bridge are at a slight downhill and often are at higher speeds during a green light. A protected bike lane would help to increase bike safety, however that would demand one fewer lane on the bridge for northbound traffic. Another bike safety issue is that of the northbound traffic on Mass Ave that turns right onto Memorial Drive. In the current layout, northbound vehicles turning right must yield to cyclists that are going through the intersection. Vehicles may not know to watch out for cyclists and can cause a dangerous collision as they turn. This collision is referred to as a 'right hook'. Eliminating the right hook collisions would require a separate right turn lane for vehicles, further reducing the number of lanes of through traffic on the bridge.

Additionally, the MBTA Route 1 bus travels through this intersection on Mass Ave. This is one of the key bus routes, which have the highest frequency. The Route 1 bus is also the highest ridership bus route in the system. While there is currently a plan to put in a bus lane on Mass Ave southbound next Spring, a bus lane going northbound would also demand one fewer lane on the bridge for through traffic. There is simply not enough space for a bus lane, right turn lane, and a bike lane.

Figure 3: Mass Ave extending North into Cambridge

A final issue with the current layout is that of coordination. This intersection is near two other signalized intersections on Mass Ave (Figure 3). The first is a T-intersection with Amherst St, and the other is a pedestrian crossing for MIT students. These intersections are all less than 350 feet apart, which is an ideal situation for two-way coordination. However, there is no coordination between these three traffic signals, further accelerating congestion and queue buildup.

This project seeks to create an intersection layout and traffic signal timing plan that increases bike safety, gives buses better priority, and improves coordination with nearby intersections for the AM peak.

Current Operation

As it currently stands, Mass Ave has two lanes of through traffic in each direction. However, a small left turn lane for northbound traffic is established in the middle of the intersection. Vehicles heading southbound on Mass Ave are not allowed to turn left.

Memorial Drive's through traffic goes under Mass Ave, so the only turning movements are right turns in each direction. There is an all-pedestrian phase that is actuated with a push button. Figure 4 shows the current ring diagram for AM peak.

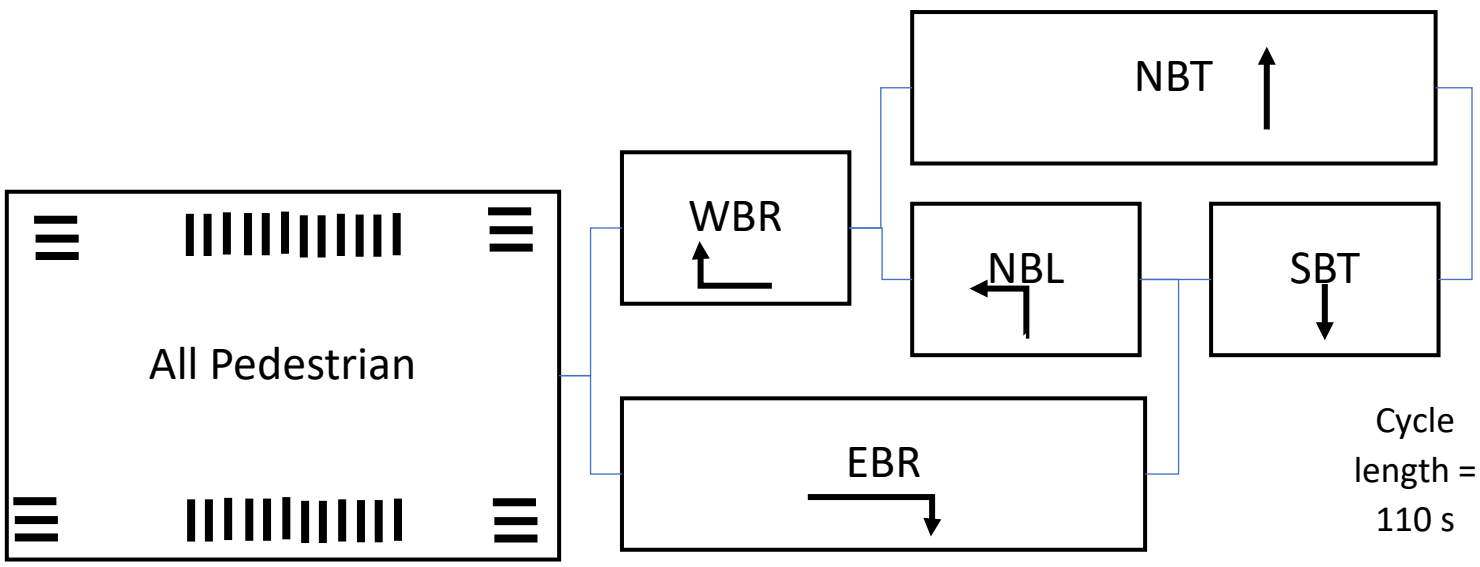

Figure 4: Ring diagram for current traffic signal timing

The vehicles turning right off Memorial Drive go first after the pedestrian phase, with the westbound traffic getting shorter green time. Then, northbound traffic gets a green light and a green arrow, allowing northbound left traffic to turn onto Memorial Drive. This left turn phase stops at a barrier with the eastbound right turns coming off Memorial Drive, giving way for the southbound traffic. Both Mass Ave through traffic phases end together at a barrier. If there is a call for a pedestrian crossing, all vehicular traffic is stopped, and all pedestrians are given a 7 second walk signal and a 14 second flashing don't walk. If there is no call, the pedestrian phase is skipped. The total cycle length with a pedestrian phase is 110 seconds.

Table 1: Current Green and Yellow Times, Mass Ave/Memorial Dr

Phase	Pedestrian	EBR	WBR	NBL	NBT	SBT
Green (s)	7 (walk)	34	15	15	53	32
Yellow (s)	14 (FDW)	5	5	5	4	4
Red clear (s)	5	1	1	1	5	5

With the underpass on Memorial Drive for through traffic, there are not as many conflict points in this intersection as there are in a standard four-way intersection. This allows for only three critical phases of vehicular traffic. However, these three phases do not give any chance for pedestrians to cross Mass Ave. This necessitates an all-pedestrian phase, severely hurting the overall cycle length. Additionally, vehicles are given more time than needed often, especially with the eastbound right turning movement. There is much room for improvement with this signal timing plan.

Traffic counts were done for the AM peak. The busiest 15-minute covered consisted of 9 cycles, lasting 15.6 minutes. To get hourly volumes, turning movement counts were divided by 15.6 and multiplied by 60. The percent of vehicles turning was also calculated.

Table 2: AM Traffic Counts, Mass Ave and Memorial Drive

Movement	EBR	WBR	NBL	NBT	NBR	SBT	SBR
Vehicle Count	56	29	22	153	57	97	2
Hourly Volume	215	112	85	588	219	373	8
% Turning			13.86%		17.33%		2.06%

The intersection of Mass Ave and Amherst St is also pretimed. Cycle length is 90 s, with 26 s of green for Amherst St, and the remainder of the cycle for Mass Ave. Traffic counts were also done for Amherst St, shown in Table 3.

Table 3: Mass Ave and Amherst St Traffic Counts

Movement	NBT	NBL	SBT	SBR	EBR	EBL
Vehicle Count	124	14	184	6	5	3
Hourly Volume	459	52	681	22	19	11
% Turning		10%		3%	63%	37%

The signalized pedestrian crossing at 77 Mass Ave, MIT's main entrance, runs on an 83 second cycle, with 35 seconds for pedestrians and 48 for Mass Ave through traffic. It is curious that none of the signals on this stretch of Mass Ave is coordinated with another (which would demand a common cycle length).

Proposed Plan

The proposed solution (Figure 5) aims to increase bike safety by providing separation in time from the heavy NB right turn flow, reduce pedestrian delay by shortening signal cycles, reduce general vehicle by shortening signal cycles and coordinating signals, and reduce transit delay by extending the southbound bus lane to Mem Drive and shortening the signal cycle.

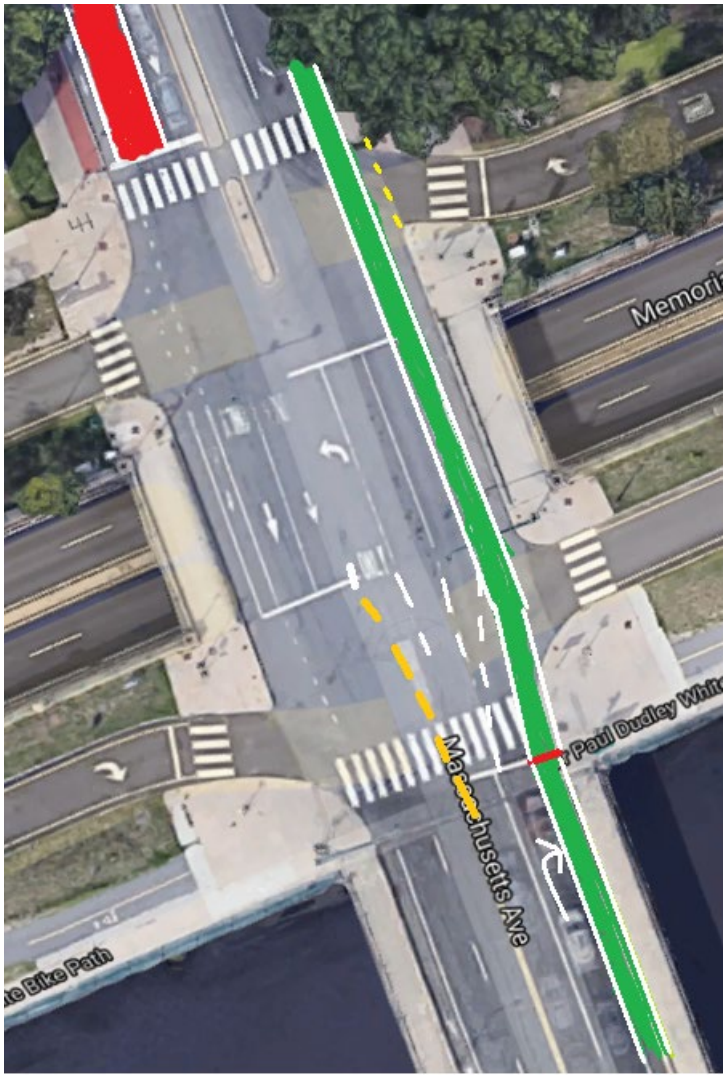

Figure 5: Proposed Layout

The proposed intersection layout changes the rightmost northbound through lane to a right turn only lane. Additionally, the northbound bike lane will have a bike signal. The rightmost southbound lane on Mass Ave has been converted to a bus only lane, which right turning vehicles may use as well. (It's safer for right turning vehicles to first merge into the bus lane and then turn right than to stay in the general traffic lane and cross the bus lane as they turn right.)

The proposed timing plan, with a cycle length of only 65 seconds, is given by the following ring diagram:

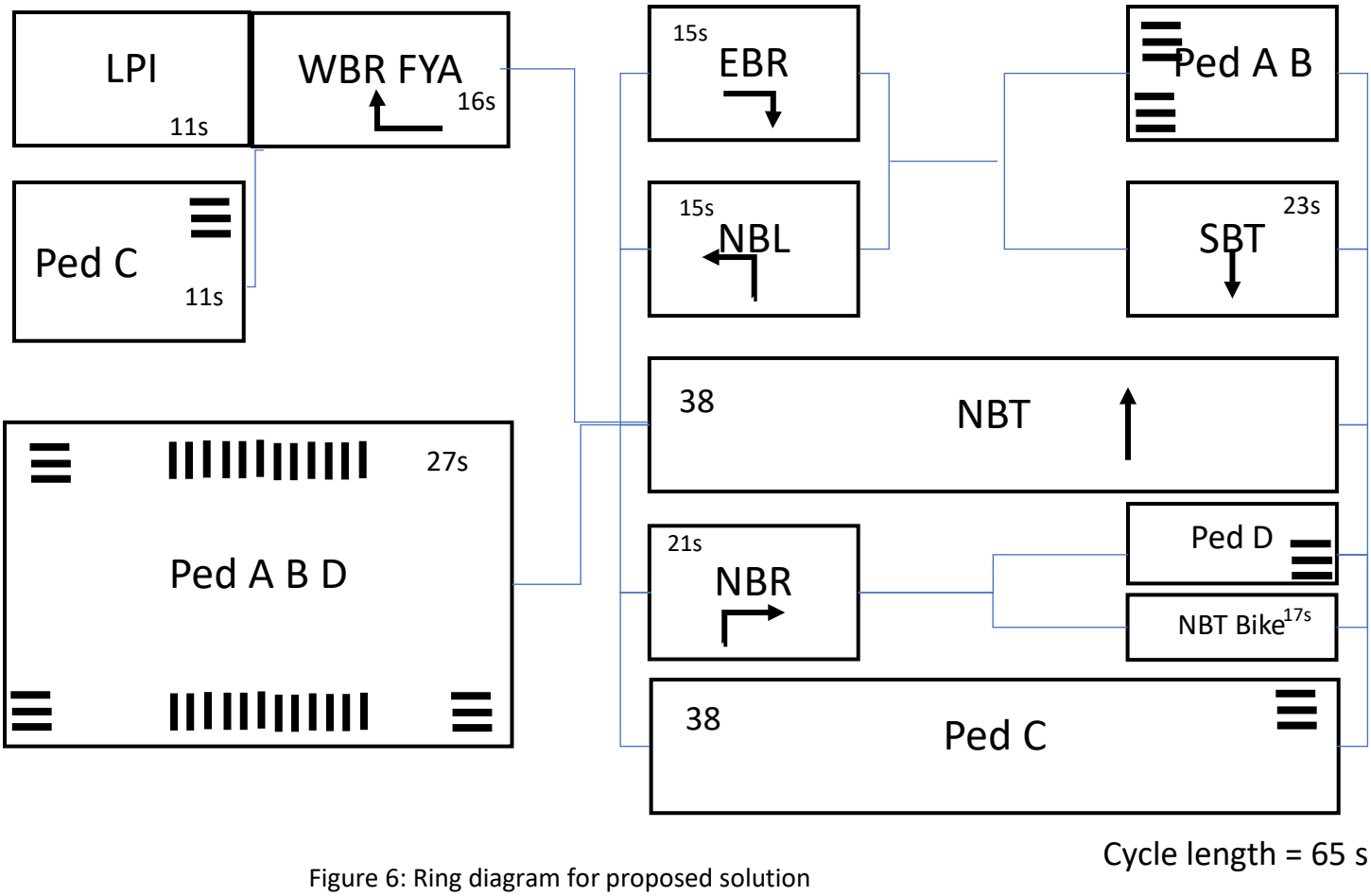

Figure 6: Ring diagram for proposed solution

Calculations for needed green time can be found in Appendix A. The new solution reduces the number of critical phases to three, which allows the cycle length to be shortened dramatically, to 65 s. This is achieved by allowing a permitted conflict between pedestrians in the north-side crosswalk (crossing Mass Ave) and westbound right turns from Memorial Drive. These turns are made a low speed, and at a relatively low volume (also, the shorter cycle length reduces the number of vehicles turning right each cycle by 40%). Additionally, we propose an 11 second Leading Pedestrian Interval (LPI), meaning the vehicular phase is delayed by 11 s, giving pedestrians an 11 s head start before the right turn signal allows WBR vehicles to advance. This head start gives westbound pedestrians crossing Mass Ave enough time to get beyond the conflict area before turning cars are released, and it gives eastbound pedestrians enough time to be established in the crosswalk before turning cars are released. The “go” display for this right turn movement will be a flashing yellow arrow (FYA), not a green arrow or green ball, reminding motorists that they are to yield to crossing pedestrians.

After the pedestrian phase, all northbound traffic runs along with eastbound right turns from Memorial Drive. After 15 s, eastbound rights and northbound left turns give way to the southbound traffic on Mass Ave. Northbound right runs a bit longer than the other turns (because of its greater traffic

volume), ending after 21 s and giving way to the northbound bike phase turns green along with pedestrians crossing the right turn lane onto Memorial Drive, labeled D. The bike phase ends at a barrier with the northbound and southbound through traffic, starting the pedestrian phase.

While the Mass Ave crossings run only during the exclusive pedestrian phase, the Mem Drive crossings also run concurrently with all or part of the Mass. Ave. phases. As a result, the west side pedestrian crossings (A and B) get 50 s out of the 65 s cycle; crossing D gets 44 s, and crossing C gets 49 s.

Pretimed control was chosen because it enables coordination with the nearby intersections and offers the best service to pedestrians. The solution could be slightly improved by adding detectors to the turn phases, ending them early if their queue vanished before the allotted time.

Additionally, coordination with the Amherst St and 77 Mass Ave intersections was achieved by reducing their cycle length to match the intersection with Mem Drive. To achieve the best possible two-way coordination on the corridor, through traffic for all three intersections was synchronized with zero offset.

Results

The existing and proposed network were both modeled in VISSIM. A simulation video of the existing network can be found here and the proposed network can be found here. One hour was simulated with a 15-minute warm-up period. After five replications, average vehicle delay in the network was 43.9 seconds for the existing network and 29.2 seconds for the proposed network. Full results can be found in Table 4.

Pedestrian delay can be modeled by the equation:

$$Delay_{ped} = \frac{[C - (W - 4)]^2}{2C}$$

With a cycle length of 110 seconds and a walk interval that is 7 seconds, and assuming that pedestrians also begin crossing during the first 4 s of Flashing Don't Walk, average pedestrian delay for the existing network is equal to 44 seconds. In the proposed solution, average delay crossing Mass Ave falls to 22 s, and average delay for the other crossings is still less.

Table 4: Existing vs Proposed Network Performance

Metric	Existing Network	Proposed Network
Pedestrian Delay (seconds)	44.5	22.4
Cycle Length (seconds)	110	65
Average Network Vehicle Delay (seconds)	43.9	29.2
Coordination with Nearby Intersections?	No	Yes
Northbound Right Hook Hazard Eliminated?	No	Yes
Southbound bus lane extended to Mem Dr?	No	Yes

The proposed network outperforms the current network in every category: pedestrian delay, vehicle delay, bicycle safety, and transit priority. For vehicles, thanks to a shorter cycle length and coordination,

average network wide delay decreases by 33%. Average pedestrian delay falls by 50% for crossing Mass Ave at Mem Drive; it also falls at Amherst Street and at 77 Mass Ave thanks to the cycle length reductions there. Another benefit is that the pedestrian phase in the proposed network is on recall, so no button press is required.

The proposed network also increases safety for cyclists. The bike signal eliminates the right hook hazard on Mass Ave northbound. While not easily seen in the simulation, buses also have better priority. The intersection has enough capacity with only a single southbound lane on Mass Ave for general traffic and separate lane for buses, and only a single northbound lane for through traffic and a separate right turn lane, whose phase is limited to make time for a bike phase. Surprisingly, there are no drawbacks to this, as vehicle delay and bus delay decreased.

The coordination added is likely a major factor of reduced vehicle delay. In the existing network, the queue builds up very quickly on Mass Ave southbound, causing some spillback at Amherst. This does not happen with the two-way coordination in the proposed network. The significantly reduced cycle time also had a large effect on the decreased pedestrian delay.

The only drawback of this proposal is the permitted conflict between westbound traffic turning right from Memorial Drive and pedestrians crossing Mass Ave at the north-side crossing. However, the 11 second Leading Pedestrian Interval gives enough time for a pedestrian heading westbound to cross the 18 feet needed to get out of the conflict zone, and it gives eastbound pedestrians enough time to establish themselves in the crosswalk so that turning cars will yield to them.

In conclusion, the intersection of Mass Ave and Memorial Drive in Cambridge can be greatly improved in terms of pedestrian delay, bus priority, increased bike safety, and coordination. Even with the new lane limitations on the bridge, a right turn only lane and bike signal would significantly reduce the average delay for buses, vehicles, and pedestrians and increase bike safety.

Appendix A: Time Needed Calculations

Phase	Startup Lost time (s)	Yellow Lost Time (s)	Red clear (s)	Total Lost Time (s)	Volume (veh/h)
All Pedestrian				27	
NBR	2	1	2	5	219
NBTL					673
NBT	2	1	6	9	588
NBL	2	1	2	5	85
EBR	2	1	2	5	215
WBR	3	1	2	6	112
SBT	2	1	6	9	381

Phase	% Right Turns	Right Turns f	% Left Turns	Left Turns f	Heavy Vehicles f	# Lanes	Sat Flow Rate S (veh/h)	Target degree of saturation	V / SX_{target}	Split Needed (s)
All Pedestrian									0	27
NBR	1	0.85	0	1	0.98	1.00	1583	0.85	0.16	14.9
NBTL	0	1	0	1	0.98	1.00	1862	0.85	0.43	25.9
NBT	0	1	0	1	0.98	1.00	1862	0.90	0.35	30.4
NBL	0	1	1	0.95	0.98	1.00	1769	0.85	0.06	8.5
EBR	1	0.85	0	1	0.98	1.00	1583	0.85	0.16	14.7
WBR	1	0.85	0	1	0.98	1.00	1583	0.85	0.08	11.1
SBT	0.026	0.9961	0	1	0.98	1.00	1855	0.90	0.23	22.9